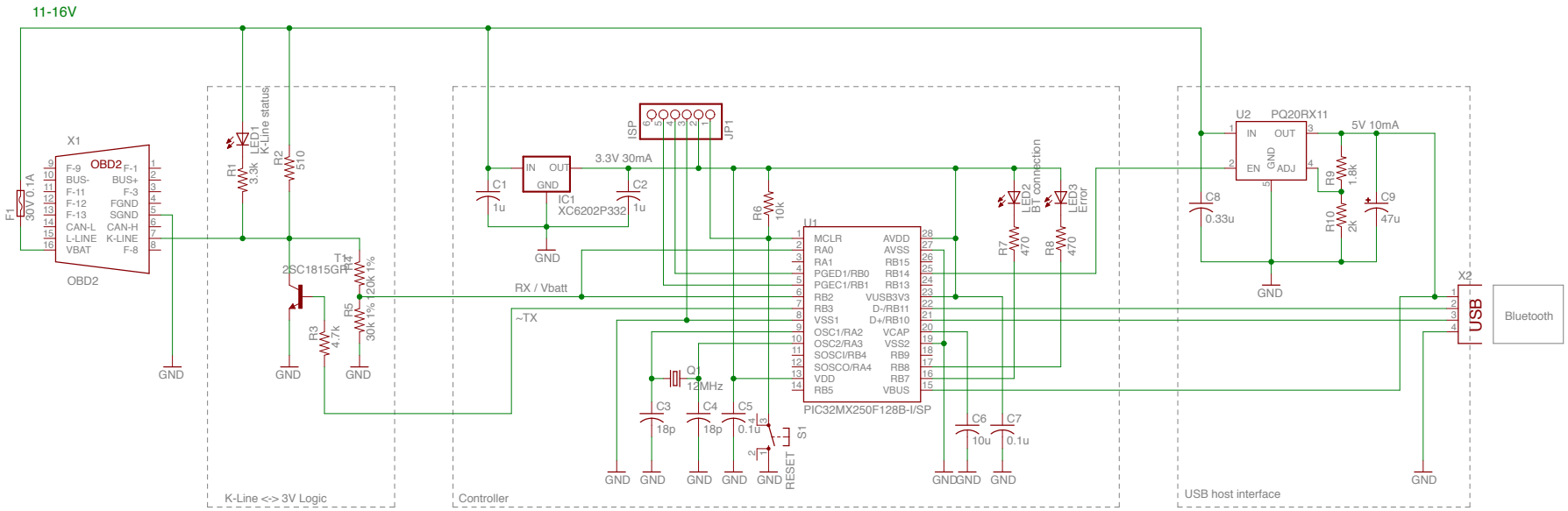

OBD2(K-Line) to USB Bluetooth converter	HA7LoggerMini 0.5
Vehcle Data Logger for HONDA ACTY TRUCK GBD-HA7	V0_5
	15/02/28 21:42
(c)2015 Toyohiko Togashi	Sheet: 1/1